Electronic Journal «Technical acoustics»
http://webcenter.ru/~eeaa/ejta/

2003, 4

M. Bouziani[(1)], A. Djebbari[(2)], J. M. Rouvaen[(1)] and M. F. Belbachir[(3)]

[(1)]*ENSIMEV - Université de Valenciennes, IEMN (UMR CNRS 8520)*
Dept O.A.E, Le Mont Houy 59313 Valenciennes Cedex, 9, France
tel: (33) 3 27511365, fax: (33) 3 27511189, e-mail: bouzi_mera@hotmail.com

[(2)]*Telecommunications and Signal Processing Lab, Djillali Liabès University,*
BP 89 Sidi Bel Abbes, 22000 Algeria, tel: (213) 48 578563, fax: (213) 48 578563

[(3)]*Signal and Systems Laboratory, USTO, BP 1505 Oran, 31000 Algeria*

Performance Analysis of Wide Band MC-CDMA

Received 10.01.2003, published 07.02.2003

Multicarrier (MC) systems are being proposed and tested for wireless data transmission in applications such as broadband wireless networking and digital broadcasting of audio and television. The combination of multicarrier modulation and code-division multiple access (CDMA) is seen as a very promising technique for the development of high-capacity wireless indoor communications. However, this scheme is very sensitive to multi-user interference.

In this work, we consider the classical MC-CDMA architecture modified by the introduction of sequence chip modulation on each subcarrier. The introduced orthogonal sequences, with suitable arrangement for each user, will show multi-user interference cancellation and increase the bandwidth required for each sub-carrier, enhancing by that the system performance. The results are given in terms of bit error rate (BER) obtained by an analytical approach for additive white Gaussian noise (AWGN) in Rayleigh fading channel.

1. INTRODUCTION

With a surging increase in demand for personal wireless radio communications within the past decade, there is a growing need for technological innovations to satisfy theses demands. Future technology must be able to allow users to efficiently share common resources, wether it involves the frequency spectrum, computing facilities, databases, or storage facilities. The multicarrier technique has grown an important alternative for wireless indoor communications. One large advantage of this technology is its robustness in case of multipath propagation. Multicarrier Code Division Multiple Access (MC-CDMA) is one representative of the multicarrier technique [1, 2]. It has been proposed combined with classical modulation [3–6] and performances of different detection strategies have been analysed. It has been shown that MC-CDMA has better spectral efficiency compared to Direct-Sequence code division multiple access (DS-CDMA) [7]. MC-CDMA has also been combined with M-ary orthogonal modulation. The results indicated that M-ary modulation significantly outperforms binary phase shift keying (BPSK) modulation [8].

In a multi-user synchronous MC-CDMA system M users have access to the same additive channel using preassigned signature waveforms and a set of orthogonal subcarriers. For each subcarrier, the received signal is the sum of M transmissions and an AWGN. Much work has been done in designing a novel receiver structure or proposing a new scheme to effectively minimise the interference caused by other user transmissions.

The aim of this paper is to propose a new MC-CDMA scheme based on suitable sequence arrangements obtained by cyclic rotation of a set of orthogonal sequences; an arrangement is assigned for each user. And from there, each user will see to transmit, on each subcarrier, a sequence that is orthogonal to sequences of the other users transmitting on same subcarrier. Hence, in addition to the orthogonality between the Pseudo-Random codes and the subcarriers another orthogonality is used within each subcarrier. This technique is equivalent to transmit DS-CDMA signals at different frequencies as in [9] but the proposed system differs by the added orthogonal sequences distribution. The idea behind this is to further enhance MC-CDMA capability to combat Multiple Access Interference (MAI).

The paper is organised as follows. Section 2 presents the proposed transmitter model and the distribution method of the common set of orthogonal sequences. Section 3 deals with the receiver model where it is assumed that m=0 is the desired user. In section 4 the channel model is presented. Section 5 concerns performance analysis of the new system where the BER is derived for two types of equalizations: Equal Gain Combining (EGC) and Maximum Rate Combining (MRC). Last, the results of the analysis are discussed in section 6.

2. TRANSMITTER MODEL

Shown in Fig. 1 is the proposed transmitter model of our MC-CDMA system. The input data symbols, $a_m(k)$, of duration T_b, are assumed to be binary antipodal where k denotes the kth bit interval and m denotes the m-th user. The i-th branch (subcarrier) of the parallel stream is multiplied by a sequence, $c_m(i)g_m^i(t)$, where $g_m^i(t) \in \{h_0(t), h_1(t), \cdots, h_{N-1}(t)\}$ and $c_m(i) \in \{-1,1\}$, and then modulated to a subcarrier spaced apart from its neighboring subcarriers by F/T_b where F is an integer number controlling the frequency spacing. $c_m(0)$, $c_m(1)$,... $c_m(N-1)$ represents the Pseudo-Random (PR) code of the m-th user. The property of the PR codes that is desired is for the codes of different users to be orthogonal, i.e.,

$$\sum_{i=0}^{N-1} c_n(i)c_m(i) = N\delta_{n,m}, \tag{1}$$

where $\delta_{n,m}$ is the Kronecker symbol.

$\{h_0(t), h_1(t), \cdots, h_{N-1}(t)\}$ can be any set of orthogonal sequences (Walch-Hadamard, Wavelets,...) where each sequence is of duration $T_c = T_b / N$. For Walch-Hadamard sequences, we have

$$\left\langle g_m^i(t), g_n^j(t) \right\rangle = \int_{iT_c}^{(i+1)T_c} g_m^i(t), g_n^j(t)dt = \int_{jT_c}^{(j+1)T_c} g_m^i(t), g_n^j(t)dt = T_c \delta_{m,n}^{i,j} = \\ = \begin{cases} T_c & \text{for } i = j \text{ and } m = n, \\ 0 & \text{for } i \neq j \text{ or } m \neq n. \end{cases} \tag{2}$$

All users share the same set of orthogonal sequences, $\{h_0(t), h_1(t), \cdots, h_{N-1}(t)\}$, with different arrangement of these sequences, over the hole set of subcarriers, for each user. Thus, for each subcarrier, active users use orthogonal sequences. In the case of Walch-Hadamard functions, $h_i(t)$ could be of chip duration $T_h = T_c / K = T_b / NK$, where K is an integer. This can, of course, avoid inter-carrier interference and the orthogonality between subcarriers is no more disturbed.

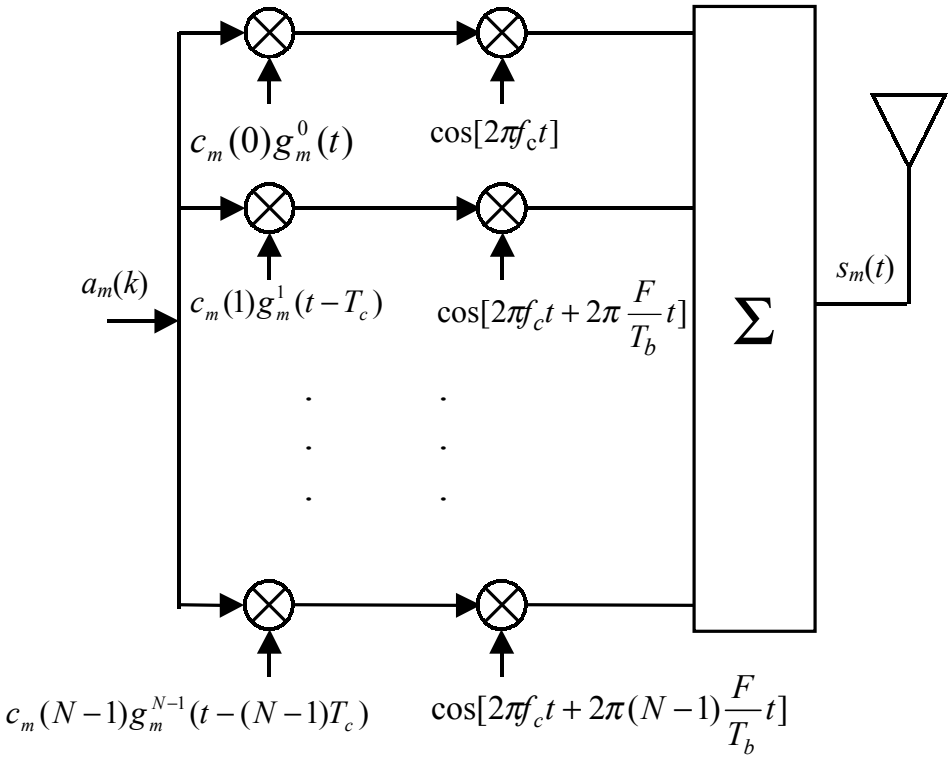

Fig. 1. Proposed transmitter model

Assuming that there are $M=N$ active users sharing the same noisy channel, the sequence arrangements over the users is presented in Table. 1

Table 1. Sequence arrangements

Subcarrier	User 0 ($g_0^i(t)$)	User 1 ($g_1^i(t)$)	…	User (N–1) ($g_{N-1}^i(t)$)
$\cos(2\pi f_c t)$	$h_0(t)$	$h_{N-1}(t)$	…	$h_1(t)$
$\cos(2\pi f_c t + 2\pi \frac{F}{T_b} t)$	$h_1(t)$	$h_0(t)$	…	$h_2(t)$
⋮	⋮	⋮	…	⋮
$\cos(2\pi f_c t + 2\pi (N-2)\frac{F}{T_b} t)$	$h_{N-2}(t)$	$h_{N-3}(t)$	…	$h_{N-1}(t)$
$\cos(2\pi f_c t + 2\pi (N-1)\frac{F}{T_b} t)$	$h_{N-1}(t)$	$h_{N-2}(t)$	…	$h_0(t)$

The transmitted signal, for each user, consists of the sum of the outputs of N branches. This process yields a multicarrier signal with subcarriers containg the PR-coded symbol. At the k-th data bit of the m-th user the transmitted signal is given by

$$s_m(t) = \sum_{i=0}^{N-1} a_m(k) c_m(i) g_m^i(t) \cos(2\pi f_c t + 2\pi i \frac{F}{T_b} t) P_{T_b}(t - kT_b), \quad (3)$$

where $P_{Tb}(t)$ is defined to be an unit amplitude pulse that is non-zero in the interval of $[0, T_b]$.

3. RECEIVER MODEL

When there are M active users, the received signal is

$$r(t) = \sum_{m=0}^{M-1} \sum_{i=0}^{N-1} \rho_{mi} a_m(k) c_m(i) g_m^i(t) \cos(2\pi f_c t + 2\pi i \frac{F}{T_b} t + \theta_{mi}) P_{T_b}(t - kT_b) + n(t), \quad (4)$$

where the effects of the channel have been included in ρ_{mi} and θ_{mi} and $n(t)$ is an AWGN with one-sided power spectral density of N_0.

A proposed receiver model is shown in Fig. 2 where it has been assumed that m=0 corresponds to the desired signal. With this model, there are N matched filters with one matched filter for each subcarrier. $d_{0,i}$ correspond to the equalizer coefficients. The output of each filter contributes one component to the decision variable, Z_0. Each matched filter consists of an oscillator with a frequency corresponding to the frequency of the particular modulated subcarrier that is of interest and an integrator. In addition, a phase offset equal to the phase distortion introduced by the channel, $\theta_{0,i}$, is included in the oscillator to synchronise the receiver to the desired signal in time. To extract the desired signal's component, the orthogonality of the sequences $g_m^i(t)$ of all active users is used. For the i-th subcarrier of the desired signal, the corresponding chip, $c_0(i)$, and sequence, $g_0^i(t)$, from the desired user's code and sequence set are multiplied with it to undo the code and the sequence set.

Assuming the users are synchronised in time and applying the proposed receiver model of Fig. 2 to the received signal given in Eq. (4) yields the following decision variable for the k-th data symbol

$$Z_0 = \sum_{m=0}^{M-1}\sum_{i=0}^{N-1}\frac{2}{T_b}\int_{kT_b}^{(k+1)T_b}\rho_{mi}a_m(k)d_{0,i}c_m(i)c_0(i)g_m^i(t)g_0^i(t)\times$$
$$\cos(2\pi f_c t + 2\pi i\frac{F}{T_b}t + \theta_{mi})\cos(2\pi f_c t + 2\pi i\frac{F}{T_b}t + \hat{\theta}_{0i})dt + \eta, \tag{5}$$

where $\hat{\theta}_{0i}$ denotes the receiver's estimation of the phase at the i-th subcarrier of the desired signal and the corresponding AWGN term, η, is given by

$$\eta = \sum_{i=0}^{N-1}\frac{2}{T_b}\int_{kT_b}^{(k+1)T_b}n(t)d_{0,i}c_m(i)c_0(i)g_m^i(t)g_0^i(t)\cos(2\pi f_c t + 2\pi i\frac{F}{T_b}t + \hat{\theta}_{0i})dt. \tag{6}$$

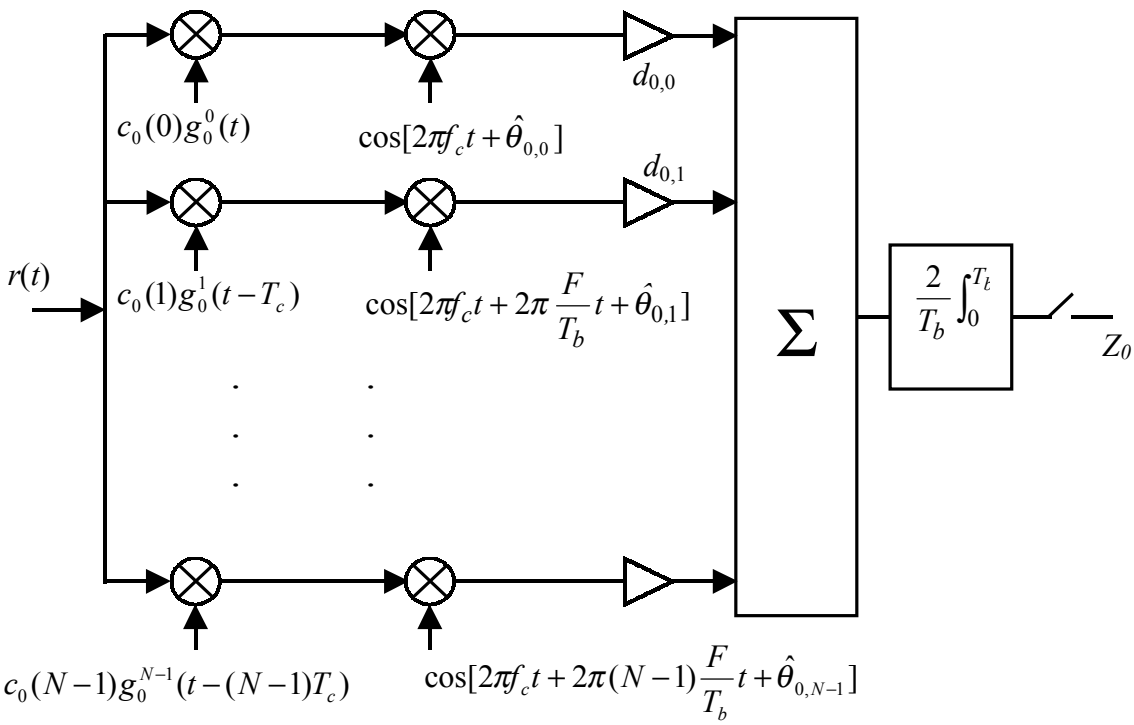

Fig. 2. Proposed receiver model

Also assumed is perfect phase correction, i.e., $\hat{\theta}_{0i} = \theta_{0i}$. The decision variable is then given by

$$Z_0 = a_0(k)\sum_{i=0}^{N-1}\rho_{0,i}d_{0,i} + \sum_{m=1}^{M-1}\sum_{i=0}^{N-1}\rho_{mi}a_m(k)d_{0,i}c_m(i)c_0(i)\left\{\frac{1}{T_b}\int_{kT_b}^{(k+1)T_b}g_m^i(t)g_0^i(t)dt\right\}\cos(\tilde{\theta}_{mi}) + \eta, \tag{7}$$

where $\tilde{\theta}_{mi} = \hat{\theta}_{0i} - \theta_{mi}$. The integral in the second term of the right-hand side of Eq. (7) can be evaluated using Eq. (2) as

$$\frac{1}{T_b}\int_{kT_b}^{(k+1)T_b} g_m^i(t)g_0^i(t)dt = \frac{1}{T_b}\sum_{i=0}^{N-1}\int_{iT_c}^{(i+1)T_c} g_m^i(t)g_0^i(t)dt = 0 \qquad \forall\, m \neq 0\,. \tag{8}$$

Finally, the decision variable reduces to

$$Z_0 = a_0(k)\sum_{i=0}^{N-1}\rho_{0,i}d_{0,i} + \eta\,. \tag{9}$$

It is noticed that Z_0 does not contain any MAI term as compared to the variable decision obtained in [1, 3].

4. CHANNEL MODEL

The effect of the channel on a given subcarrier is characterized by two parameters: an amplitude scaling, ρ_{mi}, and phase distortion, θ_{mi}, of the *m*-th user at frequency $f_c + iFT_b$. In addition, it is assumed that ρ_{mi} and θ_{mi} remain approximately constant over the symbol duration, T_b, corresponding to a flat fading channel. For a Rayleigh fading channels ρ_{mi} are independent and identically distributed (IID) Rayleigh random variables of the form

$$f_{\rho_{mi}}(\rho_{mi}) = \frac{\rho_{mi}}{\sigma_{mi}^2}e^{-\frac{\rho^2{}_{mi}}{2\sigma^2{}_{mi}}}, \quad \text{for } \rho_{mi} \geq 0\,, \tag{10}$$

with $\overline{p}_{mi} = \frac{1}{2}E\left(\rho_{mi}^2\right)$ corresponds to the average power per subcarier *i* of the *m*-th user (each user having a total local-mean power of $\overline{p}_m = N\,\overline{p}_{mi}$.

5. PERFORMANCE ANALYSIS

Using Eq. (9), we first obtain the BER, i.e.,

$$BER = \frac{1}{2}erfc\left(\sqrt{\frac{1}{2}\left(\sum_{i=0}^{N-1}\rho_{0i}d_{0i}\right)^2 \Big/ \sigma_\eta^2}\right), \tag{11}$$

where σ_η^2 is the variance of η.

In order to evaluate the performance of our proposed model, the BER has been calculated for two equalisation techniques namely EGC where the gain factor of the *i*-th subcarrier is chosen to be $d_{0i} = 1$ and MRC with $d_{0i} = \rho_{0i}$.

For these equalisation techniques, and using the law of large number for approximations [1], the corresponding BER are given by

$$BER_{EGC} = \frac{1}{2}erfc\left(\sqrt{\frac{\pi}{4}\frac{\overline{p}_0 T_b}{N_0}}\right) \text{ for EGC and} \tag{12}$$

$$BER_{MRC} = \frac{1}{2}erfc\left(\sqrt{\frac{\overline{p}_0 T_b}{N_0}}\right) \text{ for MRC.} \tag{13}$$

6. NUMERICAL RESULTS

In order to compare the performance of our proposed MC-CDMA system and that obtained for classical MC-CDMA [3], plots of the BER for transmissions versus SNR over a Rayleigh fading channel using EGC and MRC are shown in Fig. 3 and Fig. 4, respectively. The signal to noise ratio (*SNR*), $\overline{p}_0 T_b / N_0$ is varied from –10 to 10dB. The average BER for conventional MC-CDMA (downlink situation) is evaluated for *N*=128, increasing number of users and assuming that all users are received with equal power.

In increasing the number of users (*M*=10, 60, 110), the classical MC-CDMA performance degrades considerably as compared to the proposed MC-CDMA. This is noticed for both EGC (Fig. 3) and MRC (Fig. 4). This is due to the fact that the term causing degradations in conventional MC-CDMA has been perfectly cancelled in the proposed MC-CDMA. Thus, the new MC-CDMA architecture produces a good immunity against MUI.

Furthermore, examining Fig. 3 and 4, it can be seen that for the proposed MC-CDMA MRC, which is the optimal equalisation, outperforms EGC. A well characterised channel has to enhance more the performance of the proposed architecture.

CONCLUSION

In this paper, we have proposed a new synchronous MC-CDMA system which has the advantage to be MUI independent as compared to the conventional MC-CDMA. Thus, the proposed system is not disturbed by the number of active users. Furthermore, It has been shown that our proposed MC-CDMA outperforms the conventional MC-CDMA for two type of equalisation techniques (EGC and MRC); a good channel characterisation (MRC) provides better system performance.

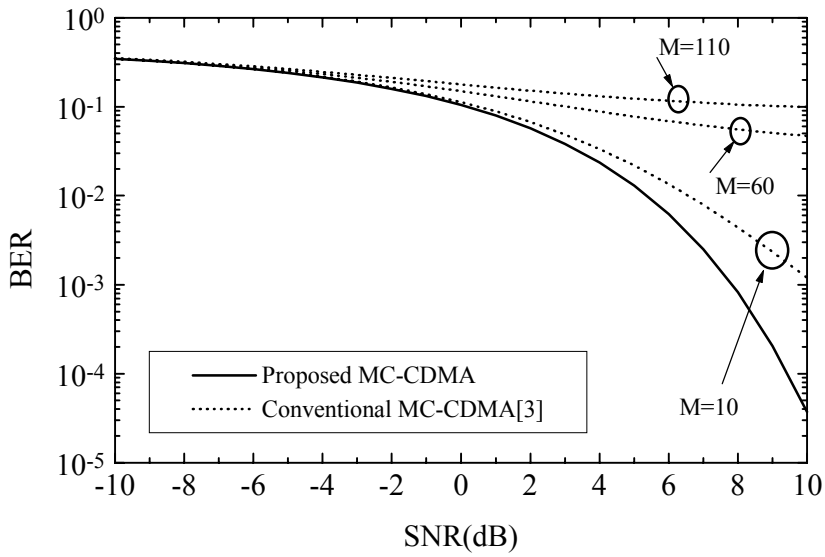

Fig. 3. BER verus SNR(dB) for EGC

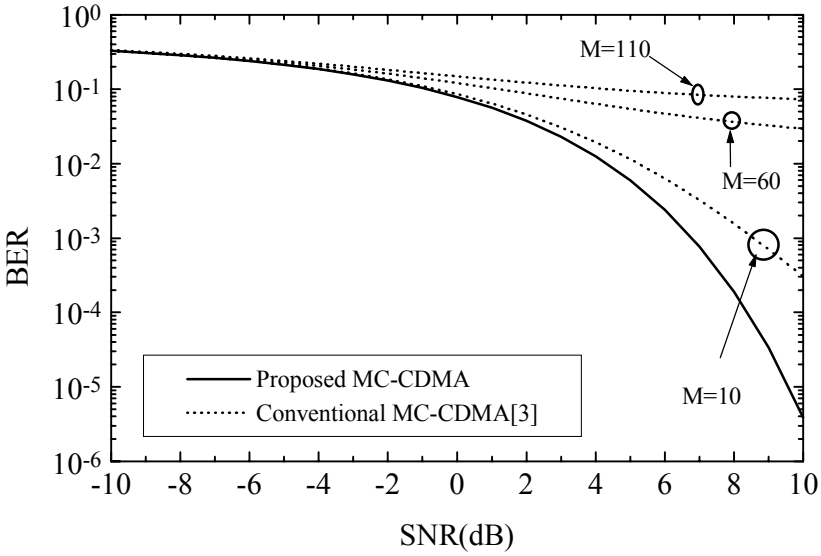

Fig 4. BER verus SNR(dB) for MRC

REFERENCES

[1] N. Yee, J. P. Linnartz and G. Fettweis. Multi-Carrier CDMA in Indoor Wireless Radio Networks. *Proc. PIRMRC'93*, Yokohama, Japan, Sept. 1993, pp. 109–113.
[2] K. Fazel and L. Papke. On the performance of convolutionaly-coded CDMA/OFDM for mobile communication system. *Proc. PIMR'93*, Yokohama, Japan, Sept. 1993, pp. 468–472.
[3] N. Yee and J.-P. Linnartz. MC-CDMA: A new Spreading Technique for Communication over Multipath Channels. Final Report 1993–1994 for MICRO Project 93–101, 1994.
[4] G. Fettweis, K. Anvari, and A. Shaikh Bahai. On Multi-Carrier Code Division Multiple Access (MC-CDMA) Modem Design. *Proc. IEEE Veh. Tech. Conf. (VTC'94)*, Stokholm, June 7–11, 1994, pp. 1670–1674,
[5] S. Kaiser. On the Performance of Different Detection Techniques for OFDM-CDMA in Fading Channels. *Proc. IEEE Global Telecommunication Conference GLOBBECOM'95)*, Singapore, November 113–17, 1995, pp. 2095–2063
[6] R. Prasad. *CDMA for Wireless Personal Communication.* Artech House, Norwood, 1996.
[7] J. P. Linnartz. Performance Analysis of Synchronous MC-CDMA in Mobile Rayleigh Channel With Both Delay and Doppler Spreads. *IEEE Transactions on Vehicular Technology*, vol. 50, no 6, Nov 2001, pp 1375–1387.
[8] A. Dekorsy, and K. D. Kammeyer. M-ary Orthogonal Modulation for MC-CDMA\ Systems in Indoor Wireless Radio Networks. *First International Workshop on MC-SS*, DLR, Oberpfaffenhofen, Germany, April 1997.
[9] S. Kondo and L. B. Milstein. Multicarrier CDMA System with co-channel interference Cancellation for an Asynchronous Forward Link. *44-th IEEE Veh Tech Conf*, Stockholm, June 7–10, 1994.