Electronic Journal «Technical Acoustics»
http://webcenter.ru/~eeaa/ejta/

2004, 10

D. A. Kas'yanov[1], G. E. Fiks[2], and G. M. Shalashov[1]

[1]*Radiophysical Research Institute, 25 Bolshaya Pecherskaya Street, Nizhny Novgorod, 603950, Russia, e-mail: kasd@nirfi.sci-nnov.ru*
[2]*Institute of Applied Physics, 46 Ulyanov Street, Nizhny Novgorod, 603950, Russia*

Diffraction as a method to focus acoustic fields radiated by extended borehole antennas

Received 21.03.2004, Published 18.08.2004

One way to make a focusing borehole antenna using diffraction focusing of the acoustic field is considered. The primary attention is paid to the methods of partition of an extent borehole antenna cylindrical aperture into areas with antiphase excitation for the formation of a cylindrical zone lens. It is shown that, there is also an alternative method besides the classical Fresnel zones partition. Specific features of the elastic field distributions in the massif, created by different zone lenses, are examined. Applicability of focusing borehole antennas, designed as zone lenses, in geotechnologies is discussed.

INTRODUCTION

Acoustic fields are more and more often used in modern borehole geotechnologies for stimulation of such processes as gas and oil production, underground leaching, underground solution of salts, etc. Most methods and approaches to the problem are generalized in [1]. The mechanisms of action of the elastic-oscillation fields on transfer processes in multiphase media are not clearly understood. At present, one can only say with confidence of some general relationships. Nevertheless, it is possible to formulate fairly specific requirements to acoustic borehole sources intended for use in a geotechnological process. Certainly the main requirement is to produce intensifying elastic field amplitudes in a target place of the processed medium at intended frequencies. It is common knowledge now stimulation of production depends on elastic field frequency and amplitude mainly. The basic factors limiting the field intensity in the near borehole area are elastic field attenuation in the massif and the non-optimality of the acoustic field radiation from the hole. Essentially, nothing can be done with the attenuation in the massif, except for using the decreasing radiation frequency capabilities, which are usually moderate. However, it is possible to improve efficiently the various processes related to radiation from the hole, and this can be done by several methods.

The first way is to increase the power density of radiator. However, this method is limited, on the one hand, by the mechanical strength, nonlinearity, and internal losses of active materials and, on the other hand, by the cavitation strength of the downhole liquid and by matching of the acoustic source with the processed medium. Another method for increasing the elastic field intensity in the near hole area is related to the formation of specific acoustic field distributions. Indeed, the geometry of a borehole favors mounting only a point or linear

acoustic source inside it (of course, we mean the sonic or near-ultrasonic frequency ranges). A point source generates a spherically diverging acoustic field in which the intensity is inversely proportional to the distance squared. This drastically restricts the range of acoustic field action. A linear source distributed along the borehole axis generates a cylindrically diverging field with intensity inversely proportional to the distance. This somehow enlarges the range of acoustic field action. In addition, there exists the possibility of compensating the cylindrical divergence that typical for a linear antenna [2, 3]. This can be done using focusing phase distributions created along the antenna generatrix. Competition between the cylindrical divergence along one coordinate and convergence along another coordinate leads to the formation of a toroidal focal region whose location can be controlled under certain conditions [3]. The theory of such antennas radiating in a medium without transverse strains is presented in [4–6], and the first geotechnological application of such antennas is described in [2, 3].

FOCUSING PHASE DISTRIBUTIONS

Focusing phase distributions along the generatrix of a linear antenna can be both quasi-continuous and discrete. By quasi-continuous we mean the classical focusing distributions, i.e., spherical, parabolic, etc., and the focusing of an acoustic field by such a distribution is called the phase focusing. The examples of discrete distributions are zone lenses and plates [4, 7–9], and, following [8], such a method of focusing by discrete structures is called the diffraction focusing.

It is well known that zone systems are inferior to quasi-continuous phase-distribution systems in terms of focusing properties. For example, it was shown in [9, 10] that in the classical problem, when a plane wave is incident on a system of cylindrical rings, the focal energy is smaller than the incident energy by a factor of π^2 if the rings form a zone plate, and by a factor of $\pi^2/4$ if the rings form a lens. Similar relationships hold for cylindrical waves [4].

Simple design is a significant advantage of the zone structure, which is especially important for radiating acoustic systems used, e.g., in borehole geoacoustics. Indeed, it is expedient to create quasi-continuous phase distributions only in receiving antennas. As far as powerful radiating antennas are concerned, this method encounters serious problems that in many cases cannot be solved. Among these we can mention, e.g., the development of delay lines with stable parameters, which are capable to transmit high power, especially if the antennas should be operable under severe conditions of high pressure and temperature. But if a focusing antenna is designed as a zone lens, then no additional phase-shifting elements should be used. Such an antenna is partitioned into zones according to a certain rule [4], and the active elements in neighboring zones are fed in antiphase. In addition, the location of the zone-lens focus can be controlled by varying the radiation frequency. The capability of tuning is restricted only by the Q-factors of the transducers composing the antenna and also by matching of the antenna–borehole–massif system [11, 12]. Zone lenses have another remarkable feature: their focusing properties are retained with the variation in the environment characteristics. For example, a change in the longitudinal velocity of sound in the massif will lead only to a change in the focal length of a borehole zone-lens with given sizes of Fresnel zones.

VARIANTS OF ZONE LENSES CONSTRUCTION

Focusing borehole antennas used, e.g., for stimulation of underground leaching [2, 3] were developed conforming to the simple geometrical rule. The active elements were combined in groups (zones) so as to satisfy the approximate equality $h_n \approx \sqrt{(n-1/4)\lambda_l F}$, where h_n is the coordinate along the antenna generatrix corresponding to the edge of the *n*-th Fresnel zone, λ_l is the wavelength of longitudinal wave in a massif, and *F* is the focal distance. The scheme of partitioning of the antenna aperture into zones is shown in Fig. 1. The antennas were assembled of piezoceramic cylinders. To simplify switching, the cylinders in the neighboring zones had opposite polarization. The elastic fields excited by the developed antennas were estimated in [11–13].

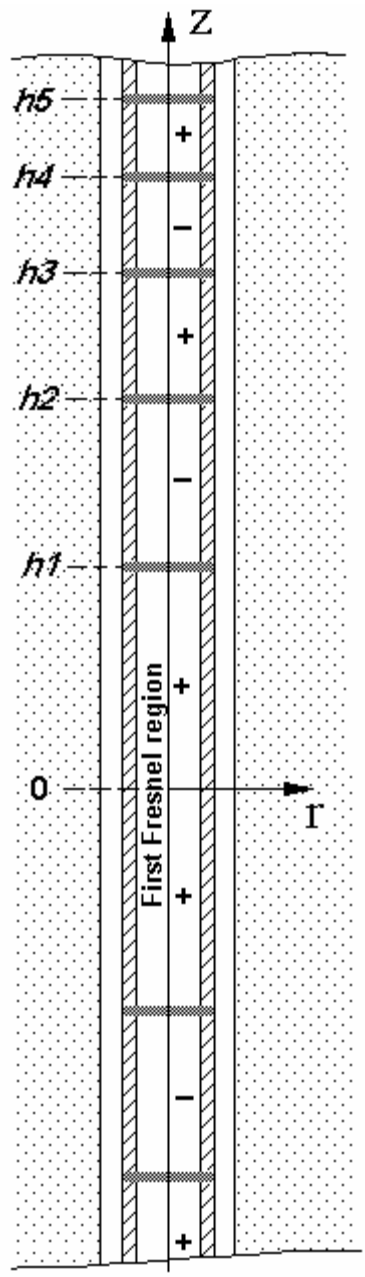

Fig. 1. Zone lens with fully filled aperture

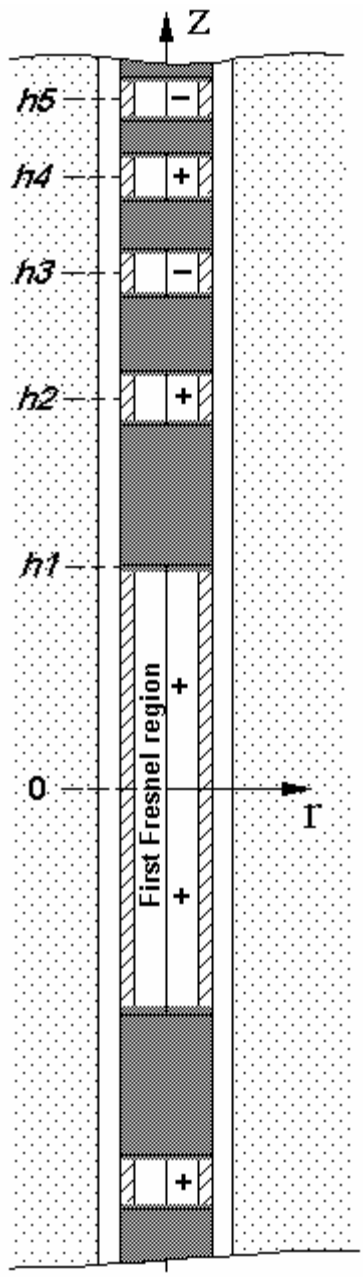

Fig. 2. Zone lens with partially filled aperture

However, the above-mentioned equality is not the only rule allowing one to create a focusing zone distribution on a cylindrical aperture. It turns out that a gain close to that of a zone lens can be obtained even if the aperture of a focusing borehole antenna is filled only partially with acoustic transducers. The technology of aperture filling can be the following. The first Fresnel zone is assembled completely using the selected type of acoustic transducers. Next, additional zones with certain wave-extent are assembled, which occupy the regions of a cylindrical aperture with centers at the edges of the cylindrical Fresnel zones [4], i.e., at the points $h_n \approx \sqrt{(n-1/4)\lambda_l F}$, n>1. The choice of the wave extensions of the additional zones is discussed below. The transducers filling the first Fresnel zone, placed between the second and third zones, the fourth and fifth zones, etc., are fed in phase, while other transducers are fed in antiphase. The scheme of filling the antenna aperture with the transducers is shown in Fig. 2. The active elements are absent in the gray colored areas.

For further calculations we use the model presented in [12]. Mathematical formulation of the problem is given there in Eqs. (2–6). The standard methods of solving this problem are also given there.

Figure 3 shows typical distributions of the radial-displacement amplitude u_r, normalized to the modulus of the longitudinal wave vector k_l, in the focal plane ($k_l z = 0$) in the near-hole environment for both variants of zone-lens design. In the latter case, the center of the last additional zone of the antenna is located at the point h_7. The parameter values for the calculations were taken from [12]. We considered the case of resonance in the antenna–borehole–massif system [11, 12].

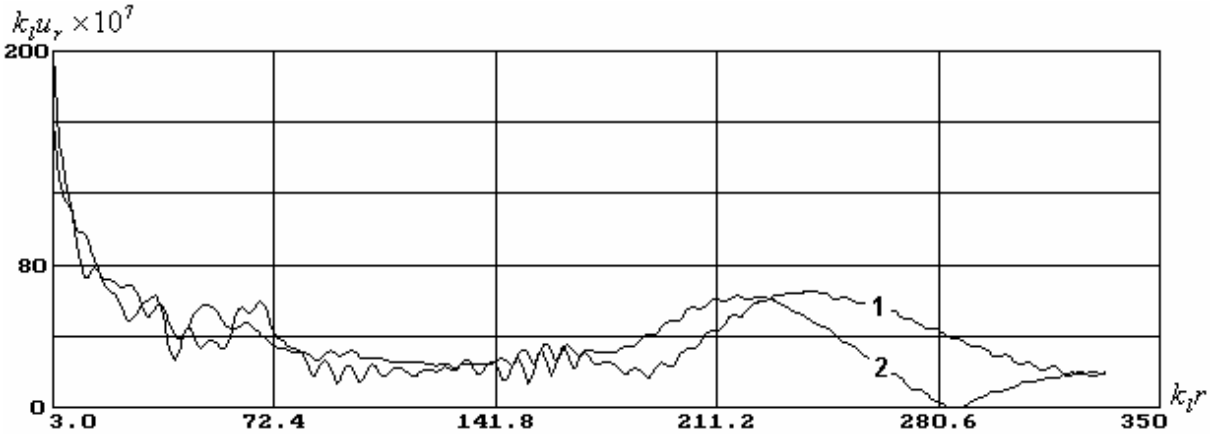

Fig. 3. Typical distributions of the radial displacement amplitude in the focal plane $k_l z = 0$, (1) the classical zone lens (7 Fresnel zones), (2) the zone lens with partially filled aperture

The gain of the zone lens with partially filled aperture compares well with the gain of the classical zone lens. However, a classical lens with the same size of the first Fresnel zone has a slightly larger focal distance. The structure of focal regions is also different. The focal region of a lens with partially filled aperture is more contrast than the focal region of the classical variant of a cylindrical zone lens, i.e., the field behind the focal point drops much more rapidly. This property displays the fact that a zone lens with partially filled aperture radiates a

smaller integral acoustic energy than the classical variant since it has a smaller radiating aperture. Manufacturing of zone lens with partially filled apertures takes smaller amount of electro-acoustic transducers than fully filled zone lens. Saving transducers, according to estimates up to quarter of number, it is possible to keep focusing properties. The property of contrast of the focus can be useful for the development of nonlinear methods for studying the near-hole area [3]. Moreover, this gives additional capabilities for the development of the methods of acoustic stimulation of geotechnological processes, especially in the area of developing a method for express diagnostic of the processes to be intensified [2].

SIZES OF THE ADDITIONAL ZONES

The field amplitude at the focus of a lens with partially filled aperture is strongly dependent on the sizes of additional zones. Moreover, the wave extensions of additional zones should decrease with increasing zone number in order to obtain the best focusing. Numerical experiments show that the additional-zone sizes Δ_m should decrease approximately as $\sqrt{m}$ with increasing zone number, where m=1 corresponds to the first additional zone in the region centered at the point h_2, i.e., between the second and third cylindrical Fresnel zones. The size Δ_1 of the first additional zone was also determined in a numerical experiment. Results are presented in Fig. 4.

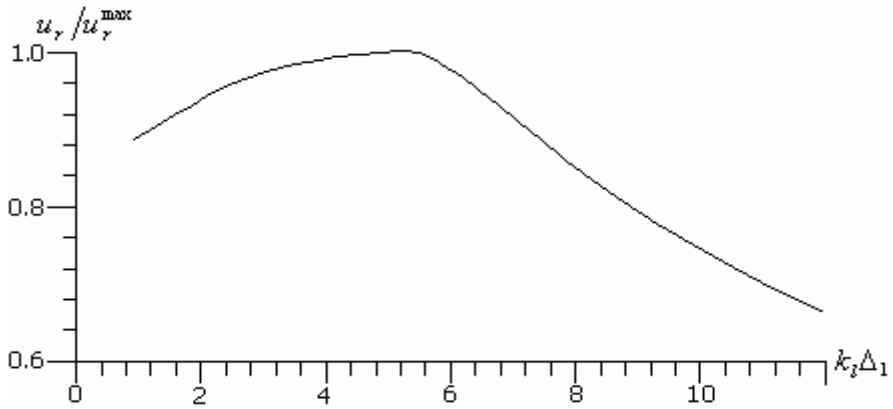

Fig. 4. Relative radial displacement amplitude in the focus depending on wave-extent of the first additional zone

Thus, the additional-zone size Δ_1 should be less than the wavelength of longitudinal wave in the massif. The optimal value is $\Delta_1 \sim 0.8\lambda_l$. In addition, the condition $F>>\lambda$ should be satisfied. Various cases where the additional zones were not centered at the points h_n were studied in numerical experiments. However, the maximum gain of a zone lens with partially filled aperture was observed in the case where the transducers were located in regions centered exactly at the points h_n. Here, the gain means the amplitude ratio of the radial displacements in the focus and on the initial antenna aperture occupied by the transducers. It is assumed that all the transducers are identical and weakly interact with each other via the construction and that the transducers are matched with the massif by means of a circular liquid layer [11, 12].

CONCERNING RADIATION IN THE CASED BOREHOLE

The presented above numerical experiments were performed for an uncased borehole. Analysis of various situations related to radiation of focused fronts from a hole in the presence of a casing pipe and a cement ring is outside the scope of this paper. We only mention one feature of the diffractive focusing: the field radiated by extended focusing designed as a zone lens antenna is normally incident on the inner wall of the hole. If the well design can be described by a model where normal displacements and stresses are conserved on the cylindrical borders, then the distributions of radial displacements on the massif boundary will also have a focusing diffraction structure. This is illustrated in Figs. 5 and 6 showing the normalized distributions of radial displacements on the massif boundary in the situations of cased and uncased boreholes. The numerical parameters for the antenna and the massif are taken from [2, 12]. In the experiment described in [2], the antenna was composed of 7 Fresnel zones (the antenna length was ~ 5 m and the diameter was 80 mm), its resonance frequency was 13.8 kHz, the longitudinal sound velocity in the massif was ~ 1900 m/s, the transverse sound velocity was ~ 980 m/s, and the density was 2.3 g/cm^3. Besides, a standard steel casing pipe with ∅114×5.2 ($c_l^{st} = 5350$ m/s, $c_t^{st} = 2900$ m/s, and ρ = 8000 kg/m^3) and a cement ring of thickness 15 mm ($c_l^{cem} = 3000$ m/s, $c_t^{cem} = 1800$ m/s, and ρ = 3000 kg/m^3) were

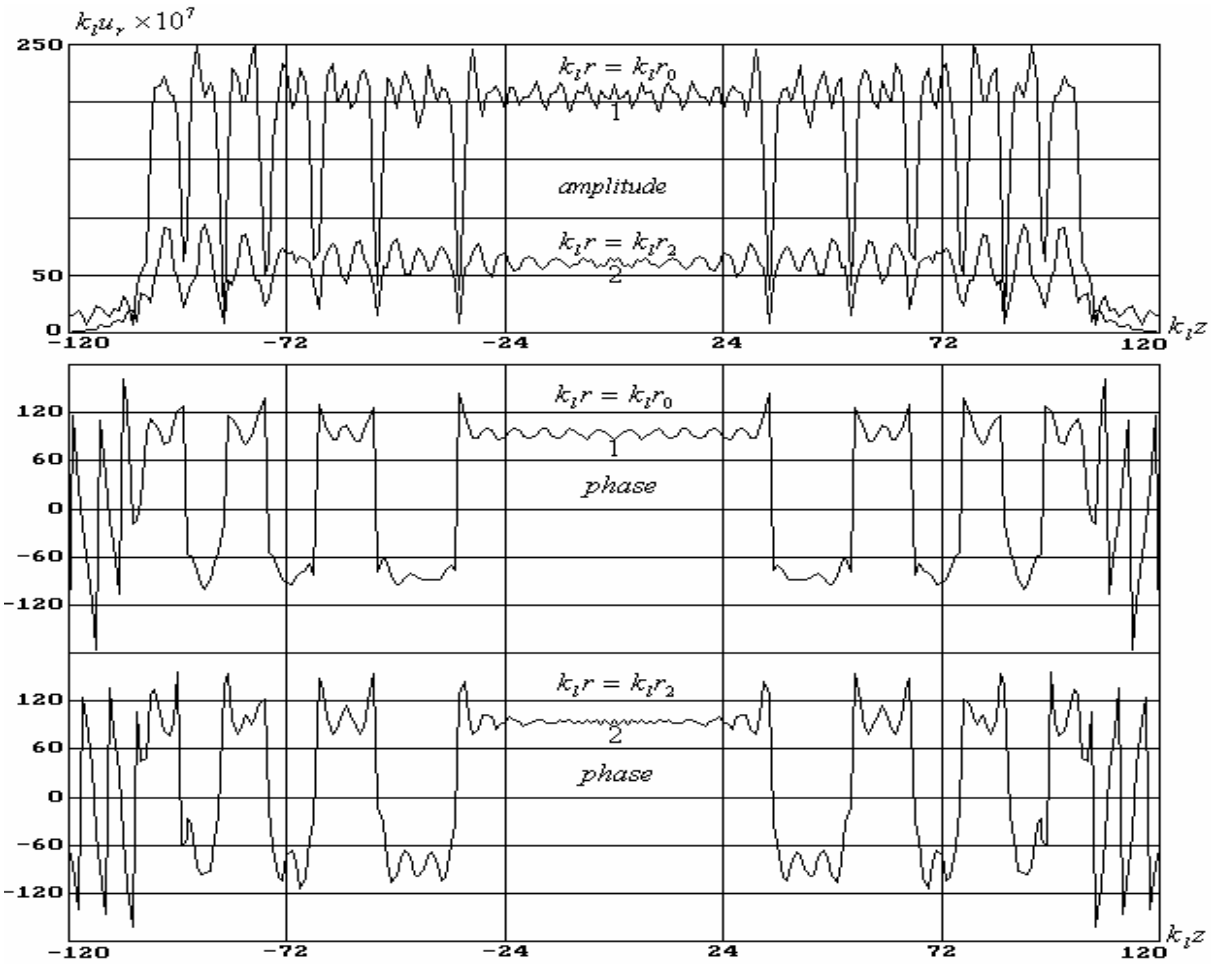

Fig. 5. Normalized distributions of radial displacements on the massif boundary in the situations of cased (2) and uncased (1) boreholes. Classical cylindrical zone lens

used for the calculations. In the calculation for an uncased hole, the inner diameter of the hole was assumed equal to the inner diameter of the casing pipe. Thus, the problem has the following geometric parameters: inner radius of the casing pipe (or hole radius in uncased borehole situation) r_0 = 51.8 mm, outer radius of the casing pipe r_1 = 57 mm, and outer radius of the cement ring (massif boundary) r_2 = 72 mm. The conditions of a rigid contact between the casing pipe and the cement ring and the cement ring with rock were used as the model boundary conditions (see, e.g., [14]). Figure 5 shows the classical zone lens: (1) the case of an uncased hole and (2) the case of a cemented casing pipe. Figure 6 shows the same, but for the zone lens with partially filled aperture. Case 1 in Fig. 5 corresponds to case 1 in Fig. 3, and case 1 in Fig. 6 corresponds to case 2 in Fig. 3.

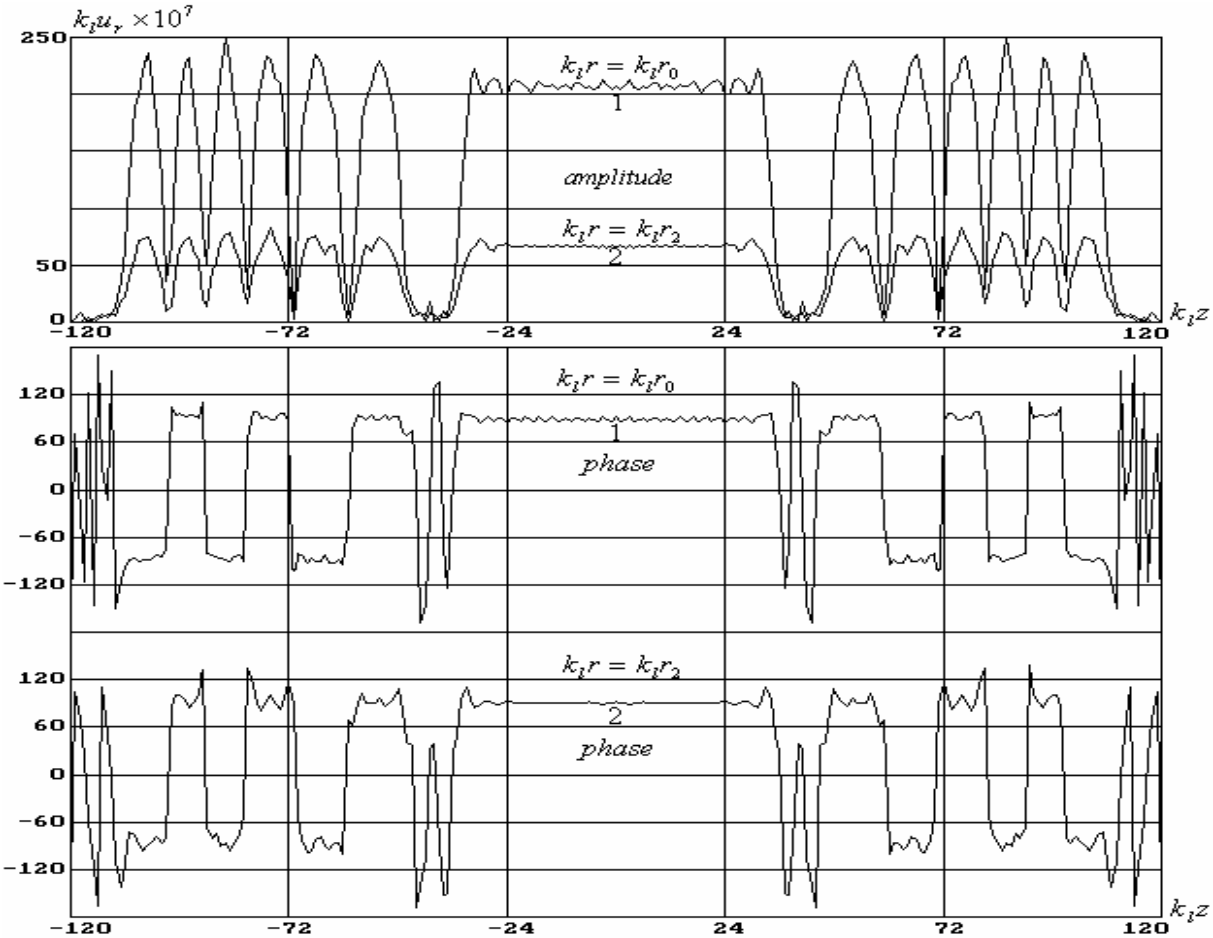

Fig. 6. Normalized distributions of radial displacements on the massif boundary in the situations of cased (2) and uncased (1) boreholes. Zone lens with partially filled aperture

The cemented casing pipe in the considered model decreases the field amplitude in the massif definitely, but the focusing field distribution is retained. The presence of the “fluid – solid” interface has a larger effect on the phase distribution of radial displacements in the case of a zone lens with partially filled aperture. Specifically, areas with inverted phase appear in this case, which impairs the focusing, and the transition between areas with antiphase excitation becomes smoother. Obviously, it is exactly these features that make some misfit of the foci of the classical zone lens and the lens with partially filled aperture. In an unbounded medium, these foci coincide [4].

CONCLUSIONS

In this paper, we present two methods for the formation of a focusing zone structure on a cylindrical aperture. The main area of application of the studied cylindrical zone lenses is the borehole acoustics, especially its branch related to the action of oscillatory elastic fields on geotechnological processes. Focusing borehole antennas assembled as zone lenses turn out to have fairly simple design since antiphase exited zones are used only. This gives premises for the development of brand new technologies for acoustic stimulation of geotechnological processes. This is stipulated by, firstly, the possibility of a significant increase in the amplitudes of elastic fields in the near-hole area due to the compensation of the cylindrical divergence and, secondly, the possibility of control of the focus location by frequency tuning of the transducers making a focusing borehole antenna.

Productive collectors in advanced borehole geotechnologies can have fairly complex design. In the engineering calculations, one must take into account many factors in each particular case, such as the variety of the casing in the collector zone and the hole annuity, characteristics of the filters or borehole perforation, features of the attenuation of elastic waves in the near-hole zone, etc. Most factors can be taken into account by using modern facilities for a finite-element analysis. The results of this paper, describing the general idea and the variants of development simple and high-efficient focusing antennas can serve as the basis for engineering calculations.

This work was supported by the Russian Foundation for Basic Research (projects 03-02-16805 and 03-02-17074) and the Ministry of Education of the Russian Federation (grant E02-8.0-58).

REFERENCES

1. Proceedings on the First Conference on Elastic-Wave Stimulation of Fluid Flow in Porous Media, Gubkin Oil and Gas University, Moscow, 2002.
2. Kas'yanov D. A. and Shalashov G. M., Acoustic intensification of underground leaching, Nonlinear Acoustics at the beginning of the 21th Century (Proceedings on the 16th International Symposium on Nonlinear Acoustics, Moscow), MSU, 2002, V. 2, P. 1201–1204; Proceedings on the First Conference on Elastic-Wave Stimulation of Fluid Flow in Porous Media, Gubkin Oil and Gas University (Satellite scientific event for the 16th ISNA), Moscow, 2002, (full).
3. Kas’yanov D. A., Shalashov G. M. Focusing of Divergent Cylindrical Waves and the Prospects for Borehole Acoustics. Radiofizika (Russia) 45(2), 170–186 (2002). Radiophysics and Quantum Electronics (USA), 45(2), 153–167 (2002).
4. Kas’yanov D. A. Cylindrical Zone Lens. Radiofizika (Russia) 43(9), 782–792 (2000). Radiophysics and Quantum Electronics (USA), 43(9), 701–710 (2000).
5. Kas’yanov D. A. Divergent Cylindrical Wave Focusing. Akusticheskii Zhurnal (Russia) 39 (6), 1076–1087 (1993). Acoust. Phys. (USA) 39(6), 566–571 (1993).
6. Kas’yanov D. A. Focusing of Diverging Cylindrical Wave II. Akusticheskii Zhurnal (Russia) 40(1), 76–83 (1994). Acoust. Phys. (USA) 40(1), 56–70 (1994).

7. Kanevskii I. N. Focusing of sound and ultrasound waves [in Russian], M. Nauka. 1977. 366 pp.
8. Gorelik G. S. Oscillations and Waves (in Russian), Fizmatgiz, Moscow, 1959. 572 pp.
9. Maluzhinets G. D. Diffraction near the axis of zone plate. Doklady Academii Nauk (Russia) 54(5), 403–406 (1946).
10. Karpacheva A. A., Rozenberg L. D., Tartakovskii B. D. Experimental investigating on diffraction near focus of zone plate. Doklady Academii Nauk (Russia) 54(5), 399–401 (1946).
11. Kas'yanov D. A. Extended piezoceramic antenna radiating in a borehole. Radiofizika (Russia) 46(2), 111–122 (2003). Radiophysics and Quantum Electronics (USA) 46(2), 111–122 (2003).
12. Kas'yanov D. A. Some details of non-compensated piezoceramic antenna radiating in borehole [in Russian], Technical Acoustics 2003. 3. http://webcenter.ru/~eeaa/ejta/
13. Kas'yanov D. A. About piezoelectric focused antenna radiating in borehole. Proceedings on the 13th Session of Russian Acoustic Society [in Russian], V. 2. M. GEOS. 2003. P. 95–98. http://rao.akin.ru/ras.htm [in English].
14. Krauklis P. V., Krauklis L. A. On the spectrum of a longitudinal wave in the borehole with cemented casing string. Issues of the dynamic theory of seismic wave propagation. Issue 17 [in Russian], Nauka, Leningrad (1976), 156–164.