Electronic Journal «Technical Acoustics»
http://webcenter.ru/~eeaa/ejta/

2005, 16

Abdel Ghani Aissaoui*, Hamza Abid, Mohamed Abid

IRECOM Laboratory, University of Sidi Bel Abbes, 22000, Algeria

Fuzzy sliding mode control for a self-controlled synchronous motor drives

Received 23.04.2005, published 06.06.2005

The application of fuzzy sliding mode control for improving the dynamic response of self controlled synchronous motor is presented. A fuzzy sliding logic controller is designed based on similarity between the fuzzy logic controller and the sliding mode control. The proposed scheme gives fast dynamic response with no overshoot and zero steady-state error. It has an important feature of being highly robust, insensitive to plant parameters variations and external disturbances. The design procedure is established to control the speed of a self controlled synchronous motor. The simulation results show that the controller designed is more effective than the conventional sliding mode controller in enhancing the robustness of control systems with high accuracy.

INTRODUCTION

The control of non linear system has been an important research and many approaches have been proposed. For some model free non linear systems, fuzzy controllers (FC's) are designed with respect to the human expert. They can be regarded as non mathematical control algorithms in contrast to a conventional feedback control algorithms. Due to the fact that a fuzzy controller is an approximate reasoning based system, under some circumstances it does not require an analytical model.

Fuzzy control (FC) using linguistic information possesses several advantages such as robustness; model free, universal approximation theorem and rules-based algorithms. However the huge amount of fuzzy rules for high order systems makes the analyses complex.

Recently, some researchers proposed fuzzy sliding-mode controllers (FSMC). Since only one variable (sliding surface) is defined as the fuzzy input variable, the main advantage of FSMC system is that the number of fuzzy rules is smaller than that for fuzzy logic controller (FLC) which usually use the error and the change of error as the fuzzy input variables.

Authors of [1, 2] have investigated the analogy between a simple FC and sliding-mode controllers with a boundary layer. They have shown that the boundary layer can be reached in finite time and the ultimate boundedness of states is obtained asymptotically even though there exist some disturbances of dynamic uncertainties of the system.

The motivation of this study is to design an FSMC control scheme in order to control the speed of synchronous motor. This study is organized as follow. In section I a dynamic model in d-q frame is presented. In section II we describe the vector control adopted. In section III we present a short description of the voltage inverter used to feed the synchronous motor. In

*coresponding author, e-mail: irecom_aissaoui@yahoo.fr

section IV the modified sliding-mode controllers (SMC) are described and its stability is guaranteed by Lyapunov theory. In section V, we show how an FC works like a modified SMC. And finally a rigorous simulation is carried out for the system under study.

1. MACHINE EQUATIONS

The more comprehensive dynamic performance of a synchronous machine can be studied by synchronously rotating d-q frame model known as Park equations. The dynamic model of synchronous motor in d-q frame can be represented by the following equations [3, 4]:

$$\begin{aligned} v_{ds} &= R_s\, i_{ds} + \frac{\mathrm{d}}{\mathrm{d}t}\phi_{ds} - \omega\phi_{qs}, \\ v_{qs} &= R_s i_{qs} + \frac{\mathrm{d}}{\mathrm{d}t}\phi_{qs} + \omega\phi_{ds}, \\ v_f &= R_f\, i_f + \frac{\mathrm{d}}{\mathrm{d}t}\phi_f. \end{aligned} \tag{1}$$

The mechanical equation of synchronous motor can be represented as:

$$J\frac{\mathrm{d}}{\mathrm{d}t}\Omega = C_e - C_r - B\Omega, \tag{2}$$

where the electromagnetic torque is given in d-q frame:

$$C_e = p\left(\phi_d i_q - \phi_q i_d\right), \tag{3}$$

in which:

$$\Omega = \frac{\mathrm{d}}{\mathrm{d}t}\theta, \tag{4}$$

$$\theta = \int \Omega\, dt, \tag{5}$$

$$\omega = \frac{\mathrm{d}}{\mathrm{d}t}\theta_e = p\,\Omega, \tag{6}$$

$$\theta_e = p\,\theta, \tag{7}$$

The flux linkage equations are:

$$\begin{aligned} \phi_{ds} &= L_{ds} i_{ds} + M_{fd} i_f, \\ \phi_{qs} &= L_{qs} i_{qs}, \\ \phi_f &= L_f i_f + M_{fd} i_{ds}, \end{aligned} \tag{8}$$

where R_s – stator resistance, R_f – field resistance, L_{ds}, L_{qs} – respectively direct and quadrature stator inductances, L_f – field leakage inductance, M_{fd} – mutual inductance between inductor and armature, ϕ_{ds} and ϕ_{qs} – respectively direct and quadrature flux, ϕ_f – field flux, C_e – electromagnetic torque, C_r – external load disturbance, p – pair number of poles, B – is the damping coefficient, J – is the moment of inertia, ω – electrical angular speed of motor. Ω – mechanical angular speed of motor, θ – mechanical rotor position, θ_e – electrical rotor position.

2. VOLTAGE INVERTER

The power circuit of a three-phase bridge inverter using six switch device is shown in figure 1. The inverter consists of three half-bridge units where the upper and lower switch of each unit are switched on and off alternatively for 180° intervals. The three half-bridges are phase-shifted by 120°. The dc supply is normally obtained from a utility power supply through a bridge rectifier and LC filter to establish a stiff dc voltage source [3].

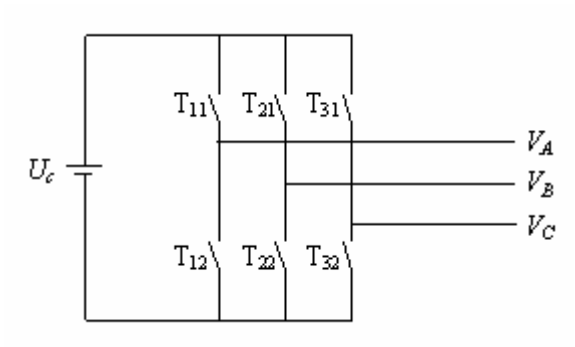

Figure 1. Voltage inverter

The switch T_{ci} ($c \in \{1,2,3\}$, $i \in \{1,2\}$) is supposed perfect. The simple inverter voltage can be presented by logical function connexion in matrix form as [5, 6, 7]

$$\begin{bmatrix} V_A \\ V_B \\ V_C \end{bmatrix} = \frac{1}{3}\begin{bmatrix} 2 & -1 & -1 \\ -1 & 2 & -1 \\ -1 & -1 & 2 \end{bmatrix}\begin{bmatrix} F_{11} \\ F_{21} \\ F_{31} \end{bmatrix} U_c, \tag{9}$$

where the logical function connexion F_{c1} is defined as: $F_{c1} = 1$ if the switch T_{c1} is closed, $F_{c1} = 0$ if the switch T_{c1} is opened, U_c is the voltage feed inverter.

3. VECTOR CONTROL

In vector control method, an alternative current machine is controlled like a separately excited direct current machine, the principle is to maintain the armature flux and the field flux in an orthogonal or decoupled axis. For an optimal function with a maximal torque, the simple solution in a synchronous motor is to maintain the direct component of stator current $i_{ds} = 0$, and control the position by the quadrature component of the stator current i_{qs}.

Substituting (8) in (3), the electromagnetic torque can be rewritten for i_f = *constant* and $i_{ds} = 0$ as follow:

$$C_e(t) = \lambda i_{qs}(t), \tag{10}$$

where $\lambda = pM_{fd} i_f$.

In the same conditions, it appears that the v_{ds} and v_{qs} equations are coupled. We have to introduce a decoupling system, by introducing the compensation terms emf_d and emf_q in which

$$\begin{aligned} emf_d &= \omega L_{qs} i_{qs}, \\ emf_q &= -\omega L_{ds} i_{ds} - \omega M_{af} i_f. \end{aligned} \tag{11}$$

Figure 2 shows the decoupling system with compensation terms.

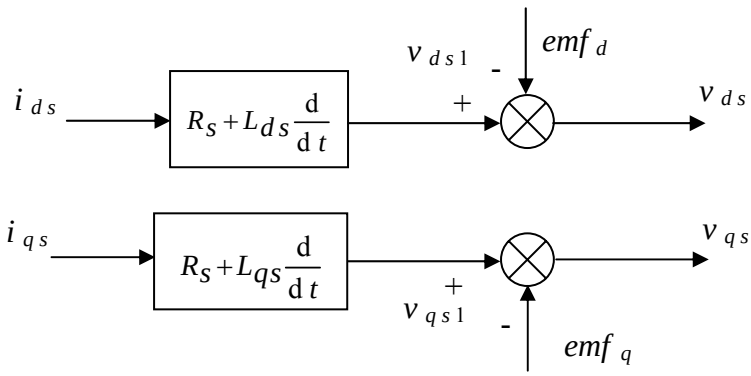

Figure 2. Decoupling system

4. SLIDING MODE CONTROL

In this section, we state the general concepts of an SMC and then derive a controller for a second order system based on a sliding surface. Consider a second-order nonlinear system which can be represented by the following state space model in a canonical form [7]:

$$\begin{aligned} \dot{x}_1(t) &= x_2(t), \\ \dot{x}_2(t) &= f(x) + b(x)u + d(t), \\ y(t) &= x_1(t), \end{aligned} \tag{12}$$

where $x = [x_1 \quad x_2]^T$ is the state vector, $f(x)$ and $b(x)$ are the nonlinear functions, u is the control input, and $d(t)$ is the external disturbances. The disturbance is assumed to be bounded as $d(t) \le D(t)$.

A sliding mode that is insensitive to parameter fluctuations and disturbances [7, 8, 9, 10, 11] can be constructed as follows. Define a linear function (sliding surface):

$$s = c\,x_1 + x_2, \tag{13}$$

which is a measure of the algebraic distance of the current state to the sliding surface; c is real and positive.

Then the dynamic behavior of (12) without disturbance on the sliding surface is

$$c\,x_1 + \dot{x}_1 = 0 \tag{14}$$

and will be stable if the coefficients of (14) are chosen such that the root of (14) is in the open left-half plane. It remains to be shown that the control law can be constructed so that the sliding surface will be reached. Consider a Lyapunov function:

$$V = \frac{1}{2}s^2. \tag{15}$$

From Lyapunov theorem we know that if $\dot{V}$ is negative definite, the system trajectory will be driven and attracted toward the sliding surface and remain sliding on it until the origin is reached asymptotically [12, 13]:

$$\dot{V} = s\,\dot{s}\,, \tag{16}$$

$$\dot{V} = s(c_1\dot{x}_1 + \dot{x}_2)\,, \tag{17}$$

$$\dot{V} = s\big(c_1 x_2 + f(x) + b(x)u + d(t)\big). \tag{18}$$

It can be easily shown from (18) that $\dot{V}$ will be negative if u has the following form:

$$u = u_{eq} + K_f\,\mathrm{sgn}\big(s\,b(x)\big)\,, \tag{19}$$

where

$$K_f < d(t)/|b(x)|\,, \tag{20}$$

$$u_{eq} = \frac{-c_1 x_2 - f(x)}{b(x)}\,, \tag{21}$$

For a defined function φ:

$$\mathrm{sgn}(\varphi) = \begin{cases} 1, & \text{if } \varphi > 0, \\ 0, & \text{if } \varphi = 0, \\ -1, & \text{if } \varphi < 0. \end{cases} \tag{22}$$

The controller described by the equation (19) will have high-frequency switching (chattering phenomena) near the sliding surface due to sgn function involved. These drastic changes of input can be avoided by introducing a boundary layer with width ε. Thus replacing $\mathrm{sgn}\big(s\,b(x)\big)$ by $sat\big(s\,b(x)/\varepsilon\big)$ in (19), we have

$$u = u_{eq} + K_f\,sat\big(s.b(x)/\varepsilon\big), \tag{23}$$

where

$\varepsilon > 0$,

$$sat(\varphi) = \begin{cases} \mathrm{sgn}(\varphi) & \text{if } |\varphi| \geq 1, \\ \varphi & \text{if } |\varphi| < 1. \end{cases} \tag{24}$$

From the above discussion, we can have the following comments:

The K_f in (19) is known as hitting control gain whose sole purpose is to make the sliding conditions $s\,\dot{s} < 0$ viable and the selection of K_f should be large enough to overcome the effect of external disturbance.

Since the width of the boundary ε indicates the ultimate boundedness [2, 10, 11, 14] of system trajectories, we can arbitrarily adjust the steady-state error by proper selection of ε. However, a small ε might produce a boundary layer so thin that it risks exciting high-frequency dynamic.

5. FUZZY SLIDING MODE CONTROL

In this section, we follow the development established in [15] and show that a particular fuzzy controller is an extension of an SMC with a boundary layer [1, 11]. Suppose the fuzzy controller in this article is constructed from the following IF-THEN rules:

Rule 1: if s is NB, then u_f is BIGGER,

Rule 2: if s is NM, then u_f is BIG,

Rule 3: if s is ZR, then u_f is MEDIUM,

Rule 4: if s is PM, then u_f is SMALL,

Rule 5: if s is PB, then u_f is SMALLER

or equivalently

Rule (i) : if s is F_s^i, then u_f is $F_{u_f}^i$, i =1,…,5.

Here NB is negative big, NM is negative medium, ZR is zero, PB is positive big and PM is positive medium. NB, NM, …, SMALL, SMALLER are labels of fuzzy sets and their corresponding membership functions are depicted in figures 3 and 4, respectively.

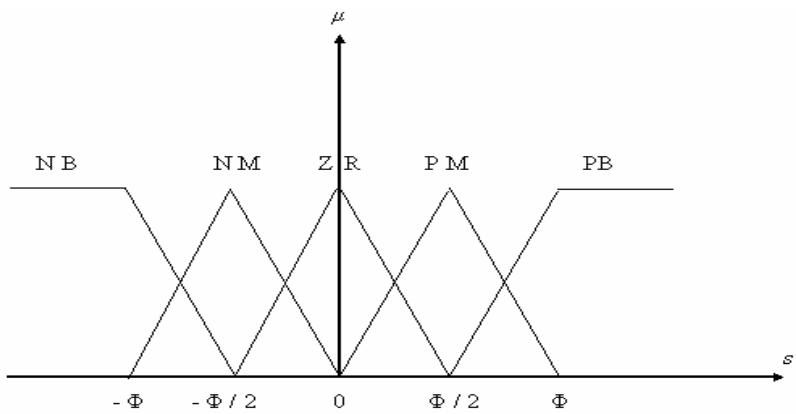

Figure 3. Membership functions for input s

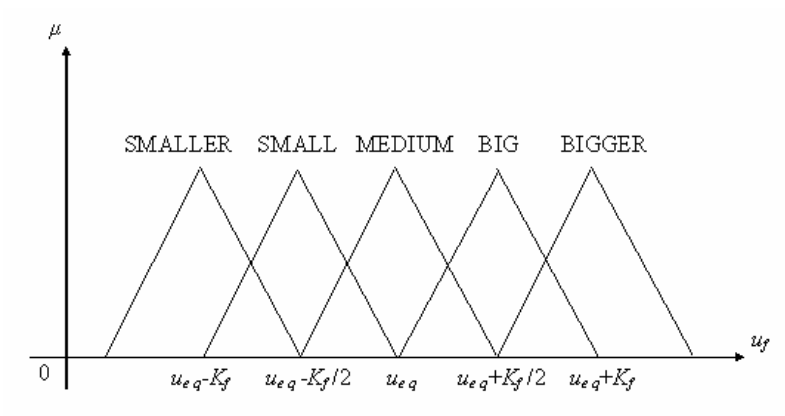

Figure 4. Membership functions for output u

Let X and Y be the input and output space of the fuzzy rules. For any arbitrary fuzzy set F_x in X, each rule R^i can determine a fuzzy set $F_x o R^i$ in Y. Use the sup-min compositional rule of inference:

$$\mu_{F_x o R^i}(u_f) = \sup_{s \in X}\left[\min\left[\mu_{F_x}(s), \min\left[\mu_{F_x^i}(s), \mu_{F_{u_f}^i}(u_f)\right]\right]\right]. \tag{25}$$

It can be further simplified by supposing F_x as a fuzzy singleton, i.e., only at its support $s = \alpha$, $\mu_{F_x}(s) = 1$ otherwise $\mu_{F_x}(s) = 0$, then (25) becomes

$$\mu_{F_X o R^i}(u_f) = \min\left[\mu_{F_x^i}(\alpha),\ \mu_{F_{u_f}^i}(u_f)\right] \tag{26}$$

and the deduced membership function $F_{u_f}^d$ of the consequences of rules is

$$\mu_{F_{u_f}^d}(u_f) = \max\left[\mu_{F_x o R^1}(u_f), \ldots, \mu_{F_x o R^5}(u_f)\right]. \tag{27}$$

The crisp output u_c is obtained by the center-of-area defuzzifier:

$$u_c = \frac{\int u_f \mu_{F_{u_f}^d}(u_f) du_f}{\int \mu_{F_{u_f}^d}(u_f) du_f}. \tag{28}$$

6. SIMULATION AND RESULTS

6.1. Description of the system

The schematic diagram of the speed control system under study is shown in figure 5. The power circuit consists of a continuous voltage supply which can provided by a six rectifier thyristors and a three phase GTO thyristors inverter whose output is connected to the stator of the synchronous machine, this inverter generates harmonics witch can be a fundamental source of noise while motor is working. The field current i_f of the synchronous machine, which determines the field flux level is controlled by voltage v_f. The parameters of the synchronous machine are given in the Appendix (Table 1).

The self-control operation of the inverter-fed synchronous machine results in a rotor field oriented control of the torque and flux in the machine. The flux in the machine is controlled independently by the field winding and the torque is affected by the fundamental component of armature current i_{qs}. In order to have an optimal functioning, the direct current i_{ds} is maintained equal to zero [16, 17].

Figure 5 shows the schematic diagram of the speed control of synchronous motor using fuzzy sliding mode control.

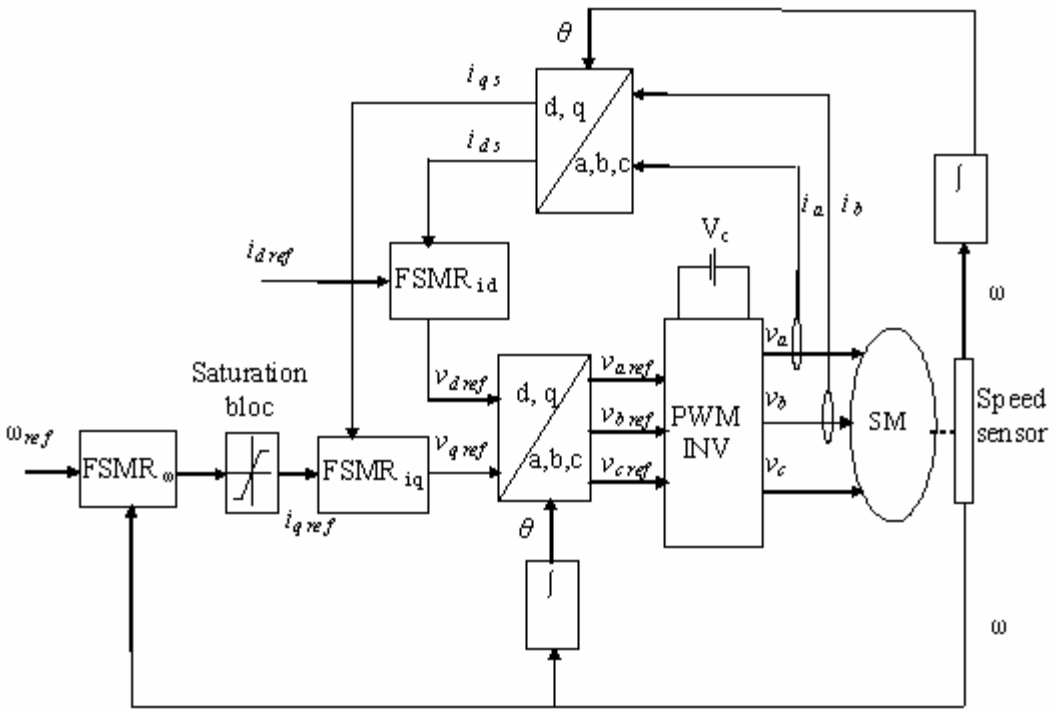

Figure 5. Speed control of synchronous motor using fuzzy sliding mode control

The regulators $FSMR_{\omega}$, $FSMR_{id}$ et $FSMR_{iq}$ are variables structure of fuzzy sliding mode control, the first one is the speed regulator, the second is the direct current regulator and the third is the quadrature current regulator. To avoid the appearance of an inadmissible value of current, a saturation bloc is used.

Figure 6 shows the general structure of the fuzzy sliding mode control (FSMC) where X is the variable of control, it can be an angular speed, direct current or a quadrature current.

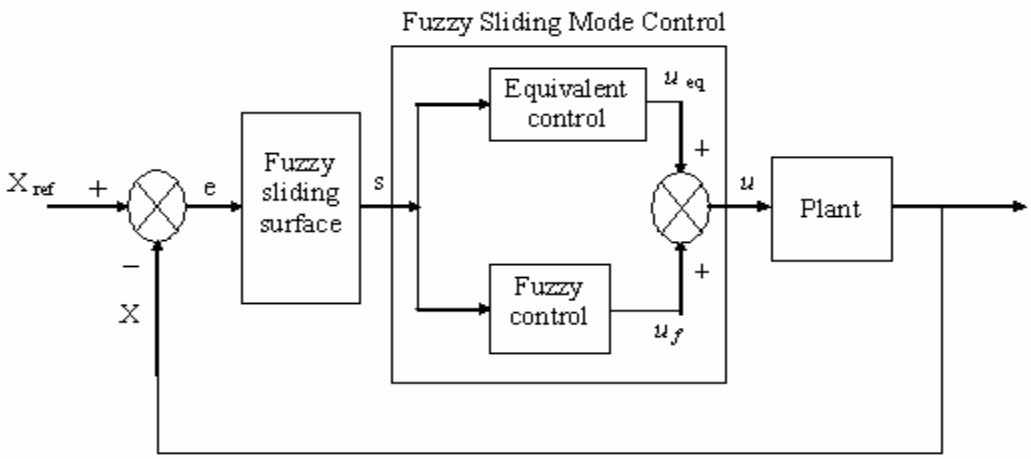

Figure 6. The bloc diagram of the fuzzy sliding mode control (FSMC)

6.2. Results and comments

To show the fuzzy sliding mode performances we have simulated the system described in figure 5. The simulation of the starting mode without load is done, followed by reversing of the reference $\omega_{ref} = \pm 200\,\text{rad/s}$ at t_3=2s,

The load (C_r) is applied in two period:

1. The reference $\omega_{ref} = +200\,\text{rad/s}$, the load ($C_r = +8\text{Nm}$) is applied at $t_1 = 1$ s and eliminated at $t_2 = 1.5$ s,
2. The reference $\omega_{ref} = -200\,\text{rad/s}$, the load ($C_r = -8\text{Nm}$) is applied at $t_4 = 3$ s and eliminated at $t_5 = 3.5$ s.

The simulation is realized using the SIMULINK software in MATLAB environment.

Figure 7 shows the performances of the fuzzy sliding mode controller.

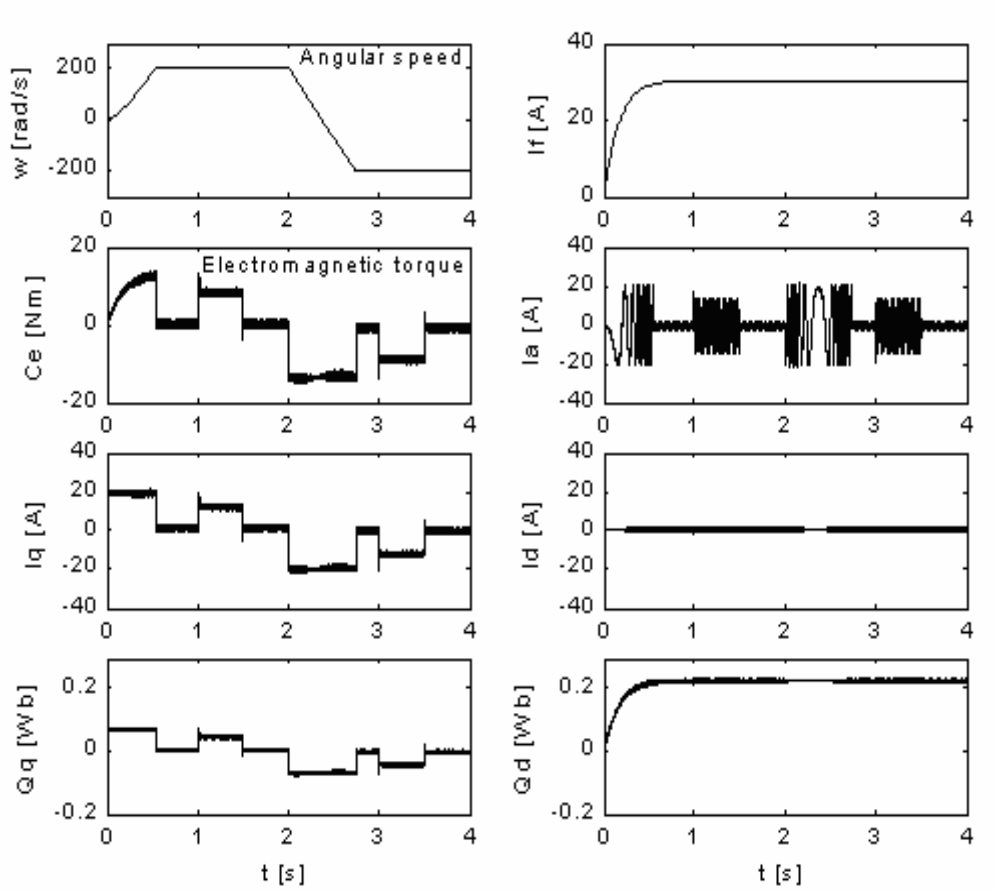

Figure 7. Simulation results of speed control with fuzzy sliding mode

The control presents the best performances, to achieve tracking of the desired trajectory and to reject disturbances. The current is limited in its maximal admissible value by a saturation function. The decoupling of torque-flux is maintained in permanent mode.

6.3. Robustness

In order to test the robustness of the used method we have studied the effect of the parameter changing (parameters variation) during steady state mode and the effect of the parameters uncertainties on the performances of the speed control.

6.3.1. Parameters variation

The parameters variation in tests can be interpreted in practice by the bad functioning conditions as overheating and saturation of magnetic circuit. Two cases are considered:

1. Variation of +50% on stator and rotor resistances.
2. Variation of +20% on stator and rotor inductances.

To illustrate the performances of control, we have simulated the starting mode of the motor without load, and the application of the load ($C_r = +8\text{Nm}$) at the instance $t_1 = 2$ s and it's elimination at $t_3 = 3$ s; in presence of the variation of parameters considered (the stator and rotor resistances, the stator and rotor inductances) at $t_2 = 2.5$ s with speed step of +200 rad/s.

Figure 8 shows the tests of robustness realized with the fuzzy sliding mode control in the case of variation of stator and rotor resistances.

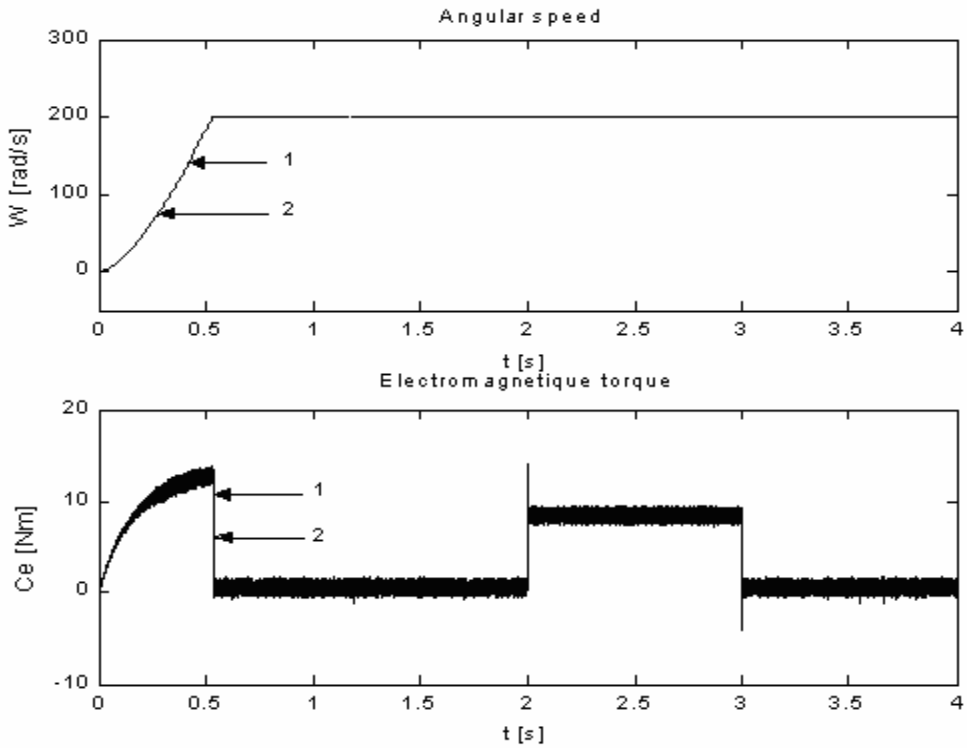

Figure 8. Test of robustness, variation of resistances: 1) nominal case, 2) +50%

Figure 9 shows the tests of robustness realized with the fuzzy sliding mode control in the case of variation of stator and rotor inductances.

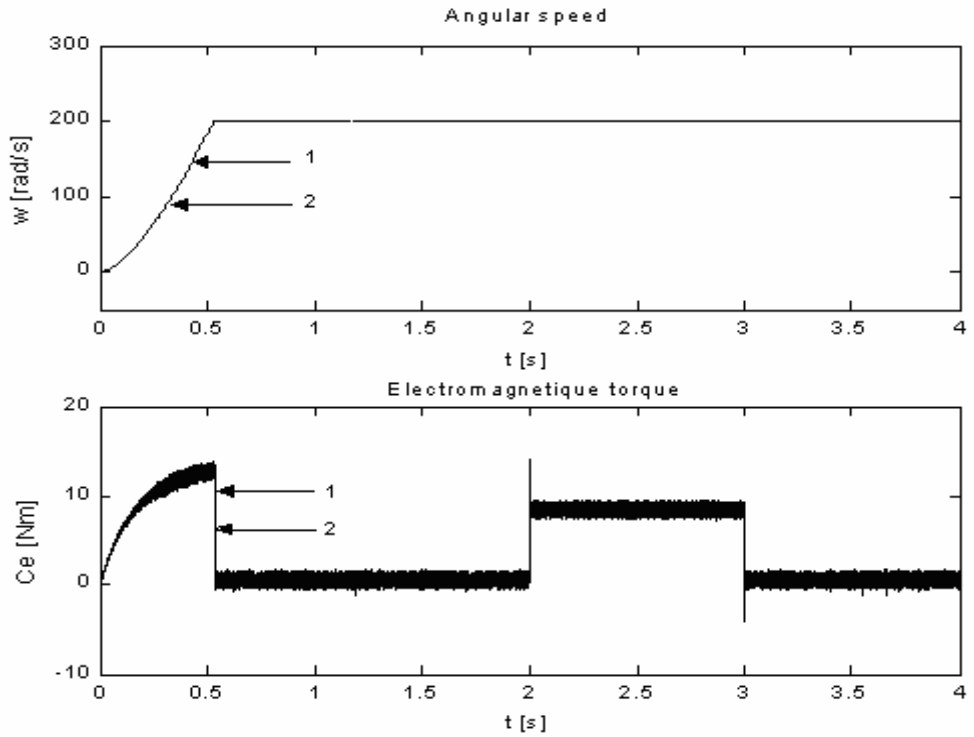

Figure 9. Test of robustness, variation of inductances: 1) nominal case, 2) +20%

The tests show that an increase of the resistances or the inductances in steady state mode doesn't have any effects on the performances of the technique used. In consequent, the performances of speed control are approximately like the nominal case.

6.3.2. Parameter uncertainties

To show the effect of the parameters uncertainties, we have simulated the system with different values of the parameter considered and compared to nominal value (real value).

Three cases are considered:

1. The moment of inertia (±50%).
2. The stator and rotor resistances (+50%).
3. The stator and rotor inductances (+20%).

To illustrate the performances of control, we have simulated the starting mode of the motor without load, and the application of the load ($C_r = +8\text{Nm}$) at the instance $t_1 = 2$ s and it's elimination at $t_2 = 3$ s; in presence of the variation of parameters considered (the moment of inertia, the stator and rotor resistances, the stator and rotor inductances) with speed step of +200 rad/s.

Figure 10 shows the tests of robustness realized with the fuzzy sliding mode control for different values of the moment of inertia. Figure 11 shows the tests of robustness realized with the fuzzy sliding mode control for different values of stator and rotor resistances.

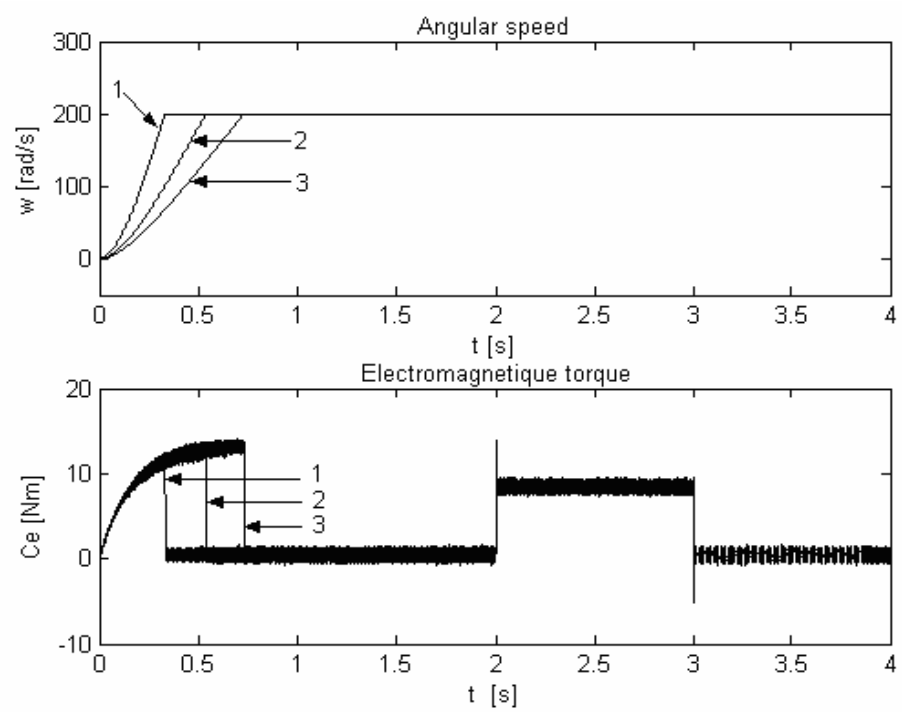

Figure 10. Test of robustness for different values of the moment of inertia:
1) – 50%, 2) nominal case, 3) +50%

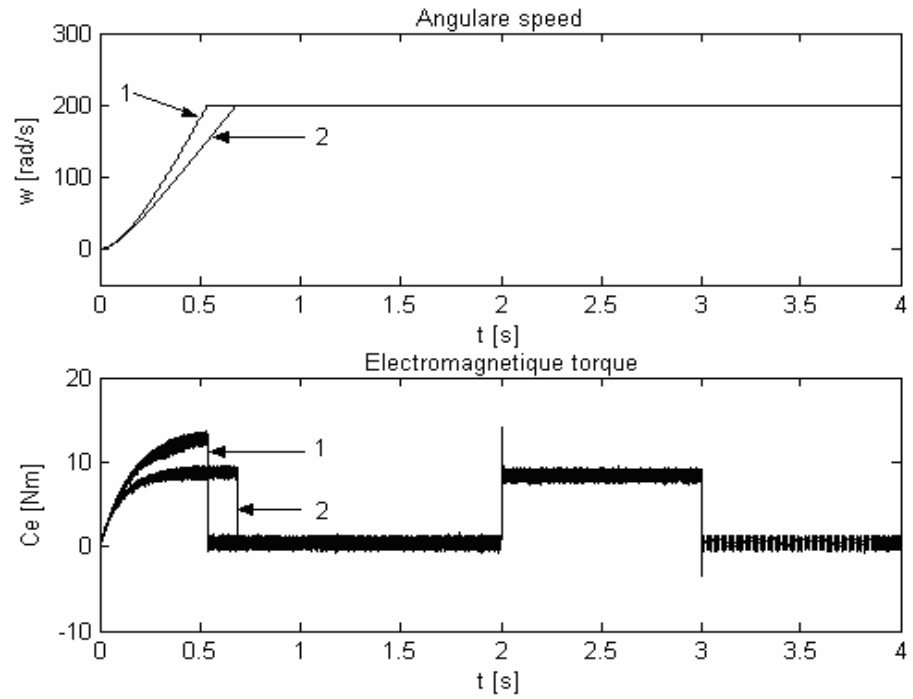

Figure 11. Test of robustness for different values of stator and rotor resistances:
1) nominal case, 2) +50%

Figure 12 shows the tests of robustness realized with the fuzzy sliding mode control for different values of stator and rotor inductances.

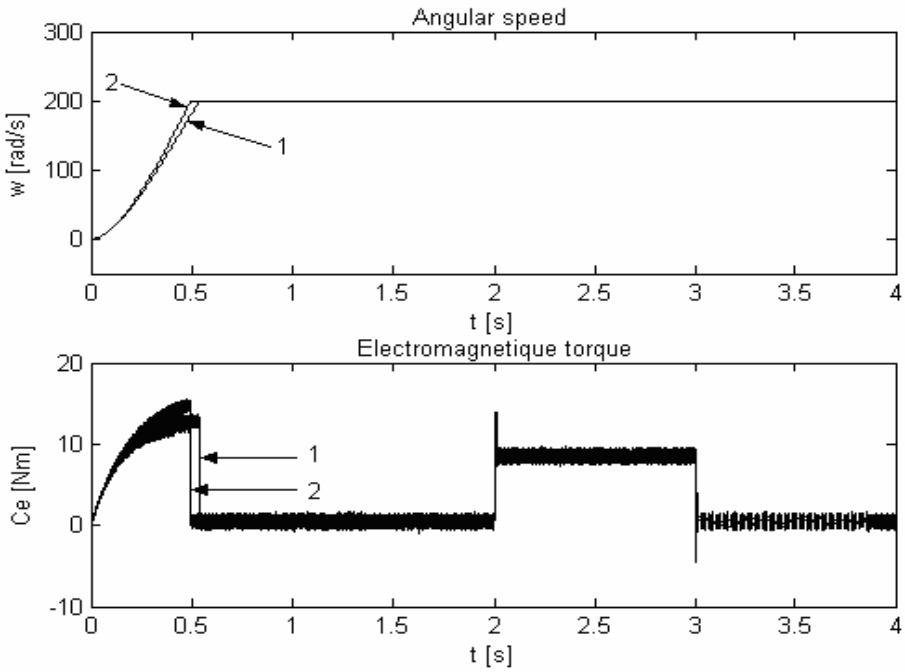

Figure 12. Test of robustness for different values of stator and rotor inductances:
1) nominal case, 2) +20%

For the robustness of control, a decrease or increase of the moment of inertia *J*, the resistances or the inductances doesn't have any effects on the performances of the technique used (figures 11 and 12). An increase of the moment of inertia gives best performances, but it presents a slow dynamic response (figure 10). The fuzzy sliding mode control gives to our controller a great place towards the control of the system with unknown parameters.

CONCLUSIONS

In this study, a numerical simulation of the vector control of the self controlled synchronous motor is done using a fuzzy sliding mode control to control speed.

The simulation results show the good quality of the fuzzy sliding controller. It appears from the response properties that it has a high performance in presence of the plant parameters variation and load disturbances. It is used to control system with unknown model.

The different simulation results obtained show the high robustness of the controller in presence of the parameters variation as the resistances, the inductances, the moment of inertia or the load. The control of speed gives fast dynamic response with no overshoot and zero steady-state error. The decoupling, stability and convergence to equilibrium point are verified.

With good choice of control parameters, the chattering phenomena is minimized, the torque fluctuations are reduced, the limitation of the current is ensured by a saturation function. This control presents an algorithm of robust control simple and easy for implantation in numerical control.

APPENDIX

Table 1. Three phases SM parameters

Rated output power	3 HP
Rated phase voltage	60 V
Rated phase current	14 A
Rated field voltage (v_f)	1.5 V
Rated field current (i_f)	30 A
Stator resistance (R_s)	0.325 Ω
Field resistance (R_f)	0.05 Ω
Direct stator inductance (L_{ds})	8.4 mH
Quadrature stator inductance (L_{qs})	3.5 mH
Field leakage inductance (L_f)	8.1 mH
Mutual inductance between inductor and armature (M_{fd})	7.56 mH
The damping coefficient (B)	0.005 N.m/s
The moment of inertia (J)	0.05 kg.m^2
Pair number of poles (p)	2

REFERENCES

1. G. C. Hwang, S. C. Lin. A stability approach to fuzzy control design for non linear systems. Fuzzy Sets Syst., vol. 48, 1992, 279–287.
2. S. Y. Yi, M. J. Chung. Systematic design and stability analysis of a fuzzy logic controller. Fuzzy Sets Syst., vol. 72, 1995, 271–298.
3. B. K. Bose. Power electronics and AC drives. Prentice Hall, Englewood Cliffs, Newjersey, 1986.
4. Guy Sturtzer. Eddie Smigiel. Modélisation et commande des moteurs triphasés. édition Ellipses, 2000.
5. M. Abid, Y. Ramdani, A. Bendaoud, A. Meroufel. Réglage par mode glissant d'une machine asynchrone sans capteur mécanique. Rev. Roum. Sci. Techn. – Electrotechn. et Energ., 2004, 406–416.
6. Cambronne J. P., Le Moigne Ph., Hautier J. P. Synthèse de la commande d'un onduleur de tension. Journal de Physique III, France, 1996, 757–778.
7. Ji Chang Lo, Ya Hui Kuo. Decoupled fuzzy sliding mode control. IEEE Trans. on Fuzzy Systems, vol. 6, N°3, August 1998.
8. V. I. Utkin. Sliding modes and their application in variable structure system. MIR, Moscow, 1978.
9. V. I. Utkin. Variable structure system with sliding modes. IEEE Trans. on Automatic Control, vol. AC-22, April 1977, 210–222.
10. Slotine J. J. E. Li W. Applied nonlinear control. Prentice Hall, USA, 1998.
11. K. J. Astrom, B. Wittenmark. Adaptive control. Addison-Wesley, 1989.

12. H. Bühler. Réglage par mode de glissement. Traité d'électricité, 1ère édition, presses polytechnique romandes, Lausanne, 1986.
13. C. Namuduri and P. C. Sen. A servo-control system using a self-controlled synchronous motor (SCSM) with sliding mode control. IEEE Trans. on Industry Application, vol. IA-23, N°2, March/April 1987.
14. H. K. Khalil. Non linear system. MacMillan, New York, 1992.
15. S. W. Kim, J. J. Lee. Design of a fuzzy controller with fuzzy sliding surface. Fuzzy Sets Syst., vol. 71, 1995, 359–367.
16. K. Kendouci. Etude comparative des différentes commandes de la machine synchrone à aimants permanents. Thèse de Magister, Université de science technologique d'Oran, septembre 2003.
17. B. Belabbes. Commande linéarisante d'un moteur synchrone à aimants permanents. Thèse de Magister, Université Djilali Liabes, 2000/2001.